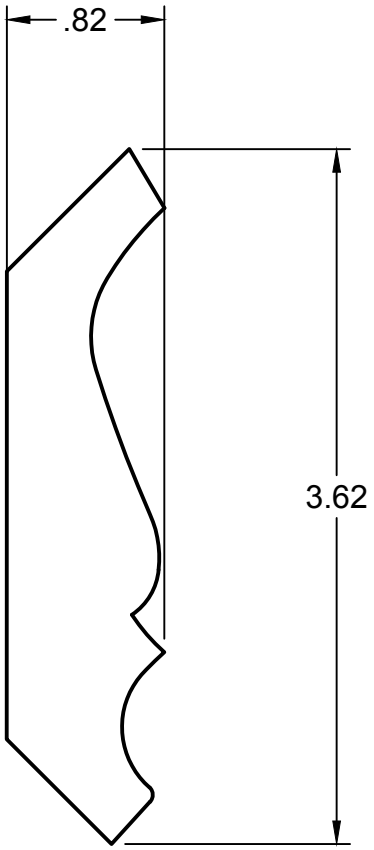

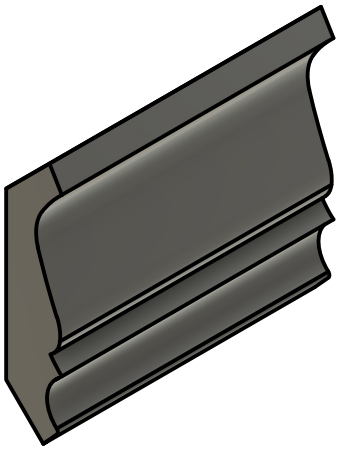

CROWN
MM CR 127

DETAILS:

Profile:	MM CR 127
Set Up:	4MS
Scale:	1:1

DIMENSIONS AVALAIBLE:

	X	Y
Standard:	0.82	3.62
Maximum:	0.82	3.62
Minimum:	0.82	3.62

ADDITIONAL NOTES:

1. All dimensions are given in inches.
2. Tolerance: ± 1/32".

6178 Mitch Owens Rd
Manotick, Ontario K4M 0V2
Phone: 613-822-6800
Email: info@wood-source.com

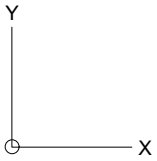

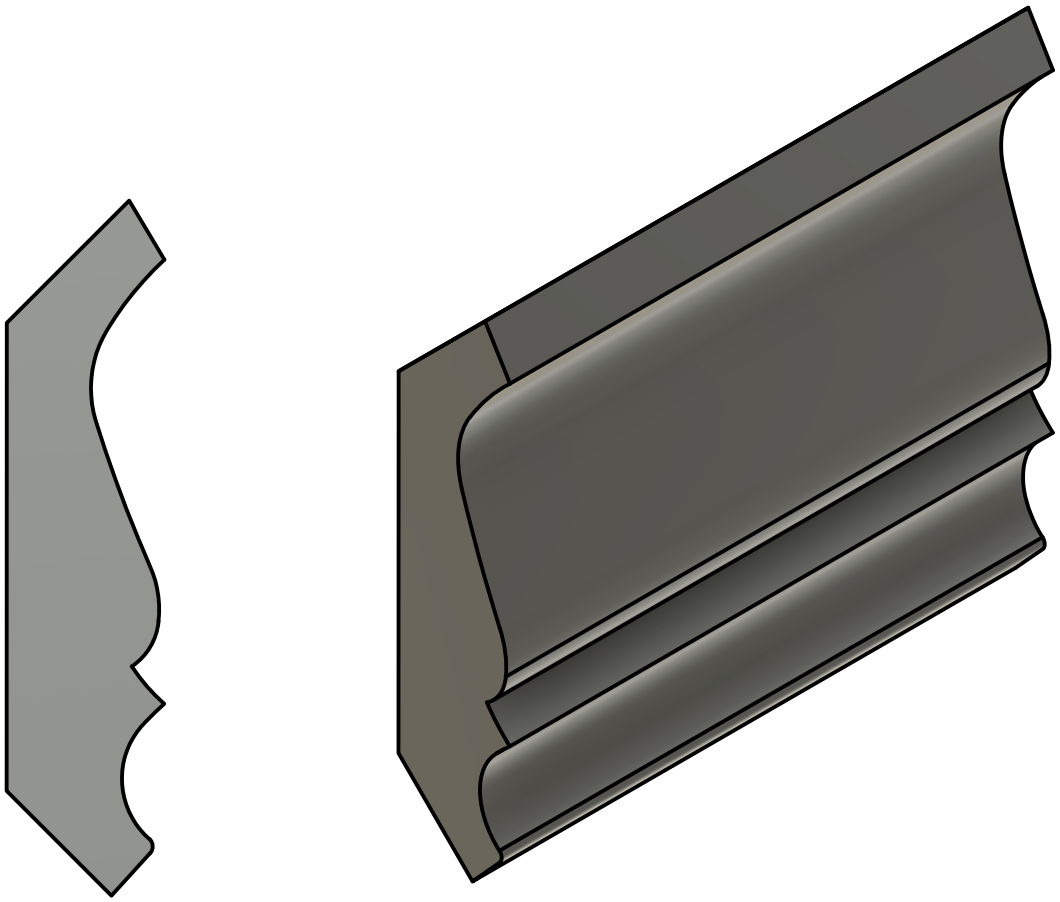

NAME MM CR 127

SCALE 1:1